GENERAL ARRANGEMENT

PLAN HISTORY		
DATE	REV.	DESCRIPTION
2011.10.06	A	FINAL DRAWING For Hull No H-4039

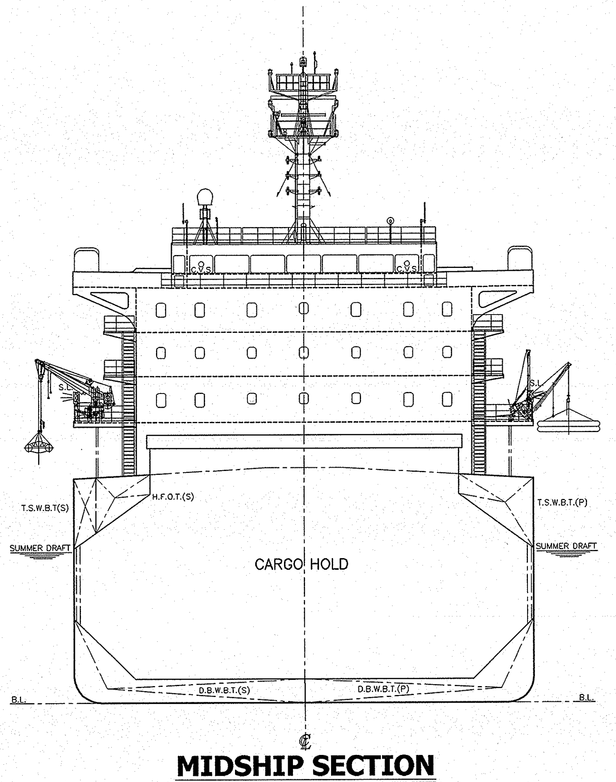

MIDSHIP SECTION

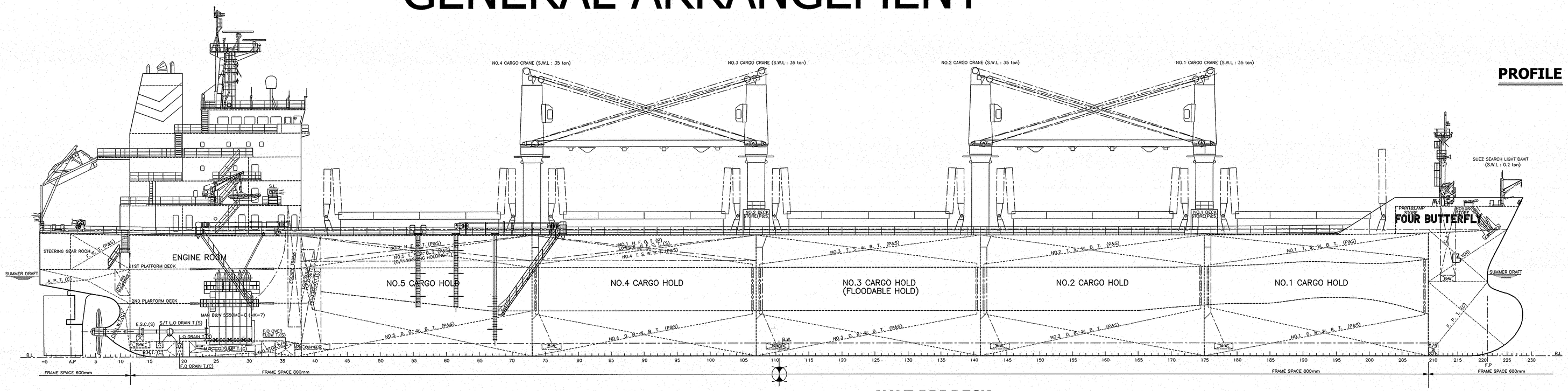

PROFILE

"A" DECK

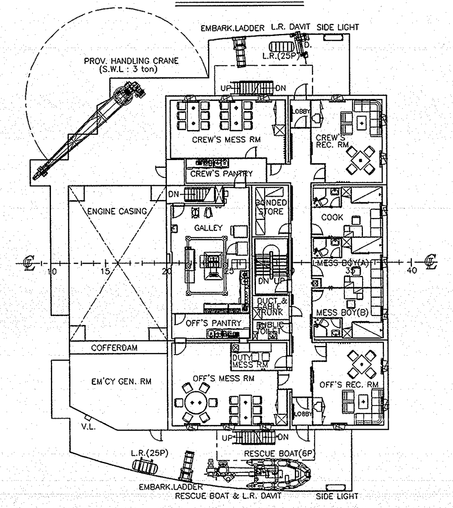

"B" DECK

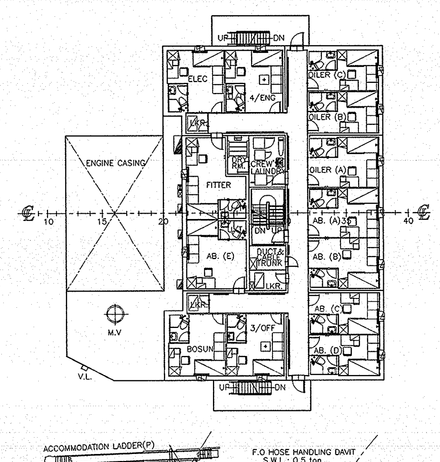

"C" DECK

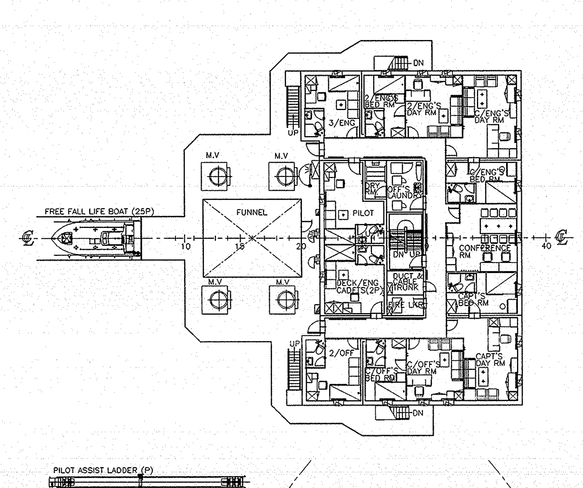

NAVI.BRI.DECK

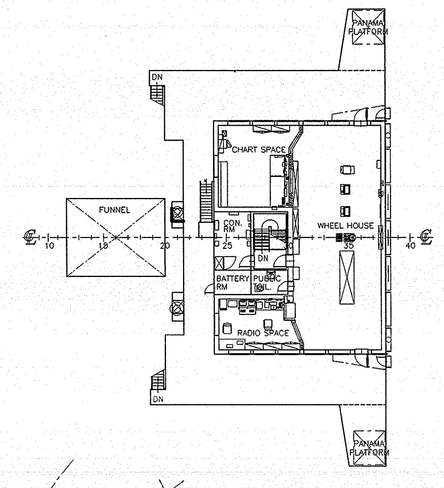

COMPASS DECK

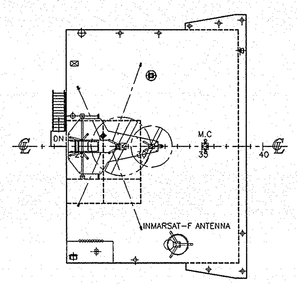

F'CLE DECK

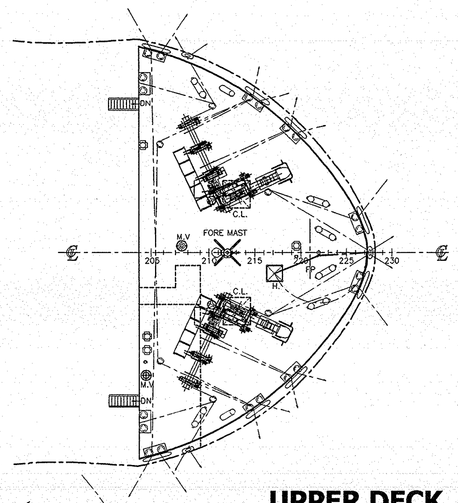

1ST PLATFORM DECK

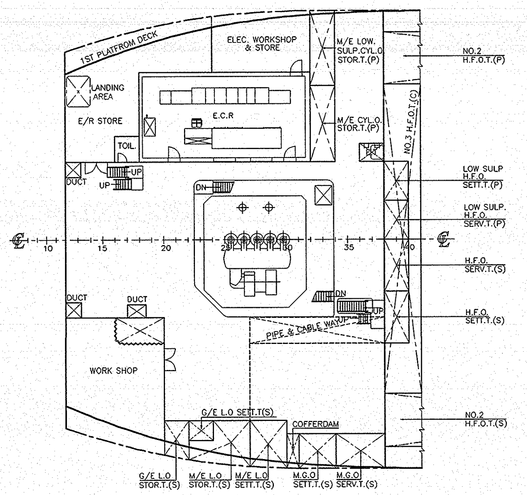

UPPER DECK

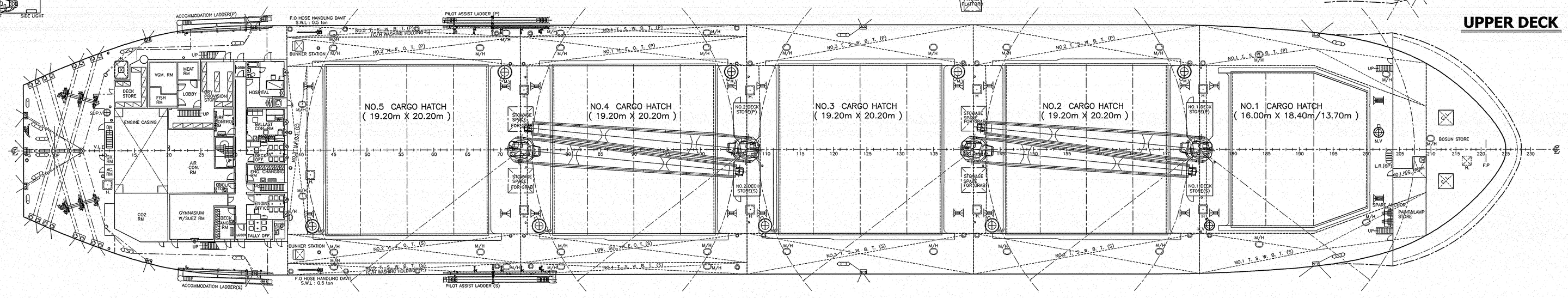

2ND PLATFORM DECK

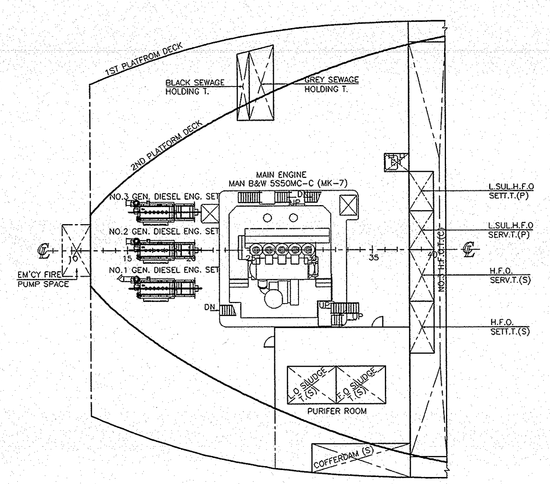

TANK TOP

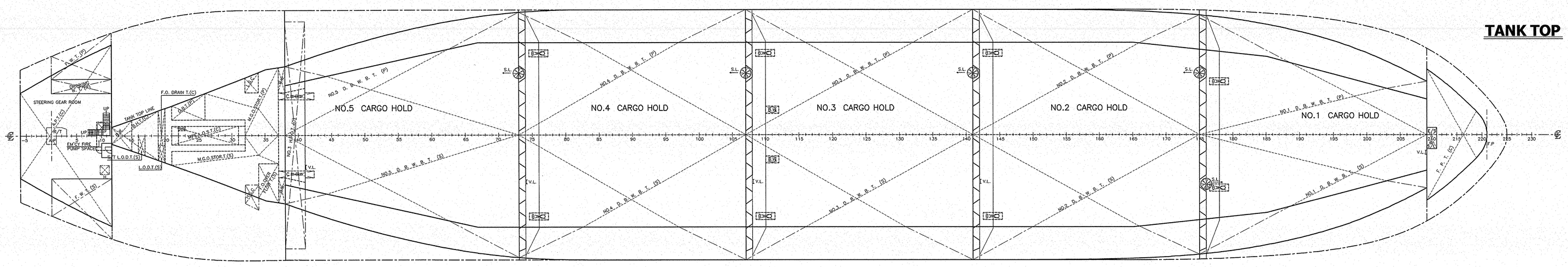

PRINCIPAL PARTICULARS

LENGTH O.A	180.00 m
LENGTH B.P	172.00 m
BREADTH (MLD)	30.00 m
DEPTH (MLD)	14.70 m
DESIGN DRAFT (MLD)	9.00 m
SUMMER DRAFT (EXT)	9.9165 m
MAIN ENGINE	
	MAN B&W Licensee 5S50MC-C (MK-VII) x 1set
	MCR: 7,900 kW (10,750 ps) x 127.0 rpm
	NCR: 6,715 kW (9,138 ps) x 120.3 rpm
SERVICE SPEED at NCR with 15% S.M on SCANTLING DRAFT	
	14.48 Kts
CLASSIFICATION	
ABS:	+1A(2) Bulk carrier, BC-A(Holds 2,4 may be empty), +AMS, +ACCU, CSR, AB-CM, GRAB[20], TCM, UWILD, CRC, CPS, GP, RW, ESP
COMPLEMENT	25 P + 6 SUEZ CREW

FOUR BUTTERFLY		BB - 02
HULL NO.	H-4039	IMO 9480708
SHIP TYPE	DWT 35,000 TON CLASS BULK CARRIER	

APPROVED : [illegible]
APPROVED : T.H. Kim
CHECKED : J.H. Kim
DRAWN : J. B. LEE
TEL. : 051)320-7093

TITLE: GENERAL ARRANGEMENT

DATE	SCALE	CLASS	DWG NO.	REV.NO.
2011.10.06	1/200	ABS	DB100031DB	A

DESIGNER: BASIC DESIGN DEPARTMENT

BUILDER: SPP SHIPBUILDING CO., LTD.